AIRCRAFT PARKING DOCKING CHART : T1 SOUTH – ICAO

Bearings are magnetic	TWR 128.350 (123.600)
Distances in metres	GND West 121.900
Elevation in ft AMSL	ATIS 120.025: Malpensa Arrival Information
Coordinates WGS 84	121.625: Malpensa Departure Information

APRON	
lighting	bearing strength
Edge: where existing blue	Surface: Concrete, Bituminous Conglomerate Strength: PCN 96/F/A/W/T

metres 0 50 100 150 200
feet 0 100 200 300 400

VAR +3° E 2020.0
Annual rate of change 8' E

AD ELEV 768	MILANO/ MALPENSA	
APRON ELEV 763	L I M C	45°37'48" N 008°43'23" E

LEGEND
- APRON AREA
- 661 SELF MANOEUVRING
- 624 PUSH BACK
- 613 DOCKING SYSTEM

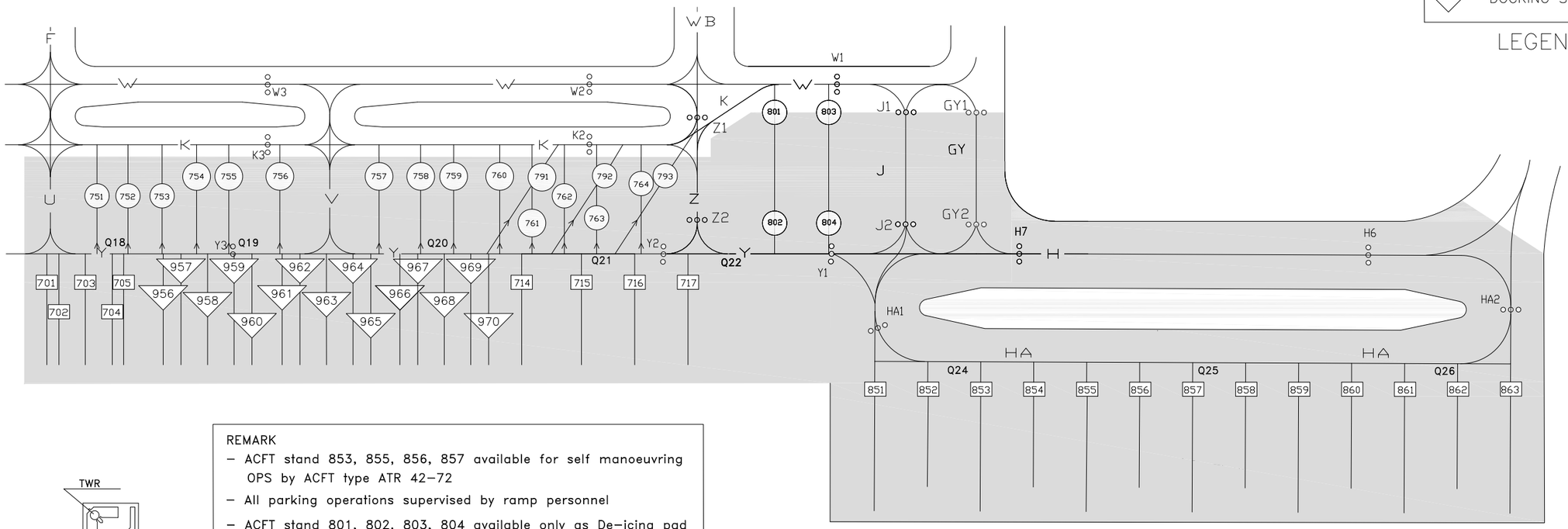

TWR

REMARK
- ACFT stand 853, 855, 856, 857 available for self manoeuvring OPS by ACFT type ATR 42–72
- All parking operations supervised by ramp personnel
- ACFT stand 801, 802, 803, 804 available only as De–icing pad

STANDS	POINTS ON PARKING AREA N	E	STANDS	POINTS ON PARKING AREA N	E	STANDS	POINTS ON PARKING AREA N	E	STANDS	POINTS ON PARKING AREA N	E	STANDS	POINTS ON PARKING AREA N	E	STANDS	POINTS ON PARKING AREA N	E
701	45°37'17.37"	008°43'04.86"	757	45°37'03.79"	008°43'18.67"	857	45°36'30.72"	008°43'13.35"	956	45°37'12.12"	008°43'6.83"						
702	45°37'16.80"	008°43'04.87"	758	45°37'01.92"	008°43'19.17"	858	45°36'29.34"	008°43'14.75"	957	45°37'11.68"	008°43'6.36"						
703	45°37'15.65"	008°43'05.34"	759	45°37'00.54"	008°43'19.54"	859	45°36'27.68"	008°43'14.19"	958	45°37'10.60"	008°43'8.19"						
704	45°37'14.42"	008°43'05.53"	760	45°36'58.67"	008°43'20.04"	860	45°36'26.30"	008°43'15.59"	959	45°37'9.12"	008°43'7.07"						
705	45°37'13.93"	008°43'05.82"	761	45°36'57.29"	008°43'20.40"	861	45°36'24.65"	008°43'15.03"	960	45°37'8.84"	008°43'7.73"						
~~706~~	~~45°37'12.18"~~	~~008°43'06.05"~~	762	45°36'55.45"	008°43'21.22"	862	45°36'23.26"	008°43'16.43"	961	45°37'7.01"	008°43'8.24"						
~~707~~	~~45°37'10.29"~~	~~008°43'06.57"~~	763	45°36'54.07"	008°43'21.60"	863	45°36'21.61"	008°43'15.87"	962	45°37'6.57"	008°43'7.77"						
~~708~~	~~45°37'08.26"~~	~~008°43'07.39"~~	764	45°36'52.34"	008°43'22.05"	J1	45°36'41.51"	008°43'28.49"	963	45°37'5.49"	008°43'9.60"						
~~709~~	~~45°37'06.50"~~	~~008°43'07.88"~~	791	45°36'57.64"	008°43'20.33"	J2	45°36'40.95"	008°43'24.38"	964	45°37'4.01"	008°43'8.48"						
~~710~~	~~45°37'04.75"~~	~~008°43'08.37"~~	792	45°36'54.37"	008°43'21.51"	GY1	45°36'37.92"	008°43'29.43"	965	45°37'3.73"	008°43'9.14"						
~~711~~	~~45°37'02.99"~~	~~008°43'08.85"~~	793	45°36'51.80"	008°43'22.04"	GY2	45°36'37.37"	008°43'25.36"	966	45°37'1.90"	008°43'9.65"						
714	45°36'56.05"	008°43'10.94"	801	45°36'47.33"	008°43'26.65"				967	45°37'1.46"	008°43'9.18"						
715	45°36'53.51"	008°43'11.65"	802	45°36'46.80"	008°43'22.68"				968	45°37'0.38"	008°43'11.01"						
716	45°36'51.12"	008°43'12.31"	803	45°36'44.62"	008°43'27.76"				969	45°36'58.91"	008°43'9.89"						
717	45°36'48.74"	008°43'12.97"	804	45°36'44.04"	008°43'23.43"				970	45°36'58.62"	008°43'10.55"						
751	45°37'16.74"	008°43'15.97"	851	45°36'39.83"	008°43'10.84"												
752	45°37'15.36"	008°43'16.41"	852	45°36'38.44"	008°43'12.23"												
753	45°37'13.52"	008°43'16.98"	853	45°36'36.79"	008°43'11.67"												
754	45°37'12.14"	008°43'16.43"	854	45°36'35.41"	008°43'13.07"												
755	45°37'10.28"	008°43'16.94"	855	45°36'33.76"	008°43'12.51"												
756	45°37'08.90"	008°43'17.32"	856	45°36'32.37"	008°43'13.91"												

Data provided by SEA SpA Malpensa

CHANGE: NEW STANDS 956 – 957 – 958 – 959 – 960 –961 – 962 – 963 – 964 – 965